eAccess™ Trigger

Automate deliverable creation based on lifecycle milestones in Pro/INTRALINK®.

business need

According to industry statistics, for every one person creating data there are ten others in the organization that need access to it. However, with the complexity of today's engineering environment and tools, having access to this data has never been more challenging. Currently, individuals outside the engineering department must make a special request to obtain expensive engineering resources, diverting them from critical projects. Ultimately, this costs organizations valuable time, money and resources, in addition to causing an unnecessary information bottleneck. Wouldn't it be nice if engineering could focus on critical engineering tasks and not deliverable creation?

solution

eAccess Trigger automates deliverable creation, freeing up valuable engineering time, creating deliverables upon designated milestones in Pro/INTRALINK. eAccess is a highly robust backend technology that is able to handle large assembly data sets, assemblies that include challenging Family Tables and Pro/PROCESS™ drawings better than any product in its class.

Pro|ENGINEER® Drawings and/or Models can be converted to any of the supported output types, named according to organizational standards such as partname_rev.pdf and moved to a network file folder. eAccess supports up to 5 milestone events and includes basic watermark functionality, archive capability, subfolder configurations, custom naming conventions, basic workflow, and much more. Additional output modules can be added like BOM output and Parameter output.

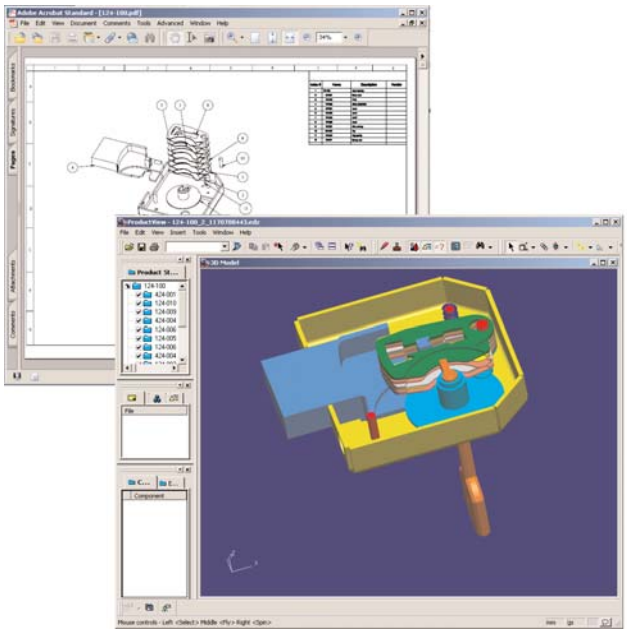

Supported Pro/INTRALINK Milestone Events:
Promote
Check in
RTP Approval

Supported File Types:
Pro|ENGINEER Drawings: PDF, HPGL, Native
Pro|ENGINEER Parts: STEP, IGES, Product View (.edz), Native
Pro|ENGINEER Assys:STEP, IGES, Product View (.edz), Native
AutoCAD®: PDF, Native
Other non PTC Files: Native

Supported Platforms:
Pro/INTRALINK 3.3 and 3.4
Pro|ENGINEER Wildfire 2.0 and 3.0
Windows XP, 2000, 2003 Server
Solaris 8 or above

Fishbowl Solutions • www.fishbowlsolutions.com • © 2007 Fishbowl Solutions
3601 Park Center Blvd, Suite 106 • Minneapolis, MN 55416 •
TEL (952) 465-3400 • FAX (952) 465-3401